REV	ECN NO.	DESCRIPTION	DRN	APP'D	DATE

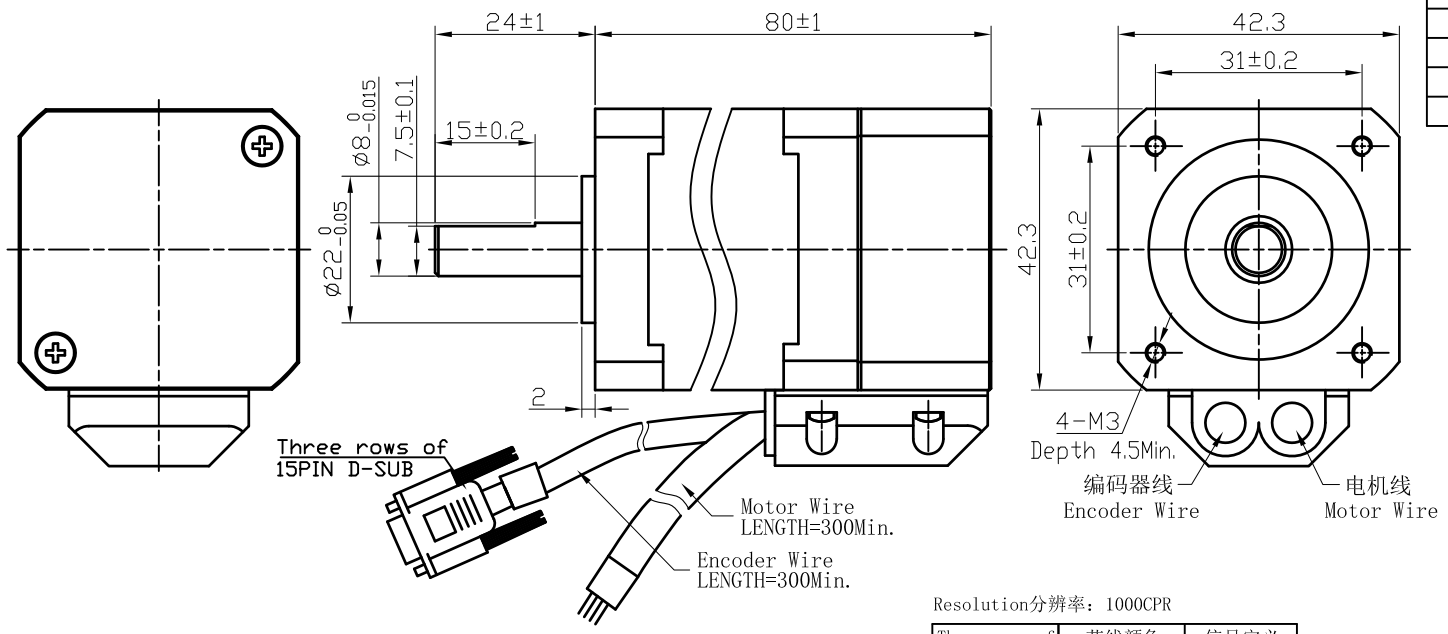

Wiring Diagram(接线图)

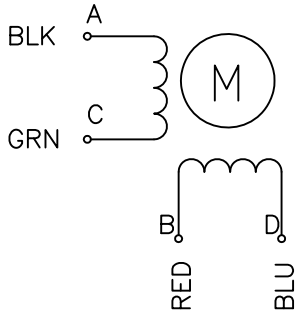

Resolution分辨率：1000CPR

Three rows of 15PIN D-SUB	芯线颜色 (Colour)	信号定义 (Definition)
3	红白(RED/WHT)	GND
2	红(RED)	VCC(5V)
13	蓝(BLU)	EA-
1	蓝黑(BLU/BLK)	EA+
12	黑(BLK)	EB-
11	黑白(BLK/WHT)	EB+
外壳(shell)	编织(knit)	

Exciting Sequence(励磁顺序)

CCW DIRECTION	STEP	A	C	B	D
⇩	1	+		+	
	2		+	+	
	3		+		+
	4	+			+
	1	+		+	

CCW,see from flange side
(逆时针，从法兰侧看)

SPECIFICATION

STEP ANGLE	步距角	1.8°/full step(整步)
STEP ANGLE ACCURACY	步距角精度	±5%
NUMBER OF PHASE	绕组相数	2
RATED VOLTAGE	额定电压	4.0 V
RATED CURRENT	额定电流	2.3 A
RESISTANCE/PHASE	每相电阻	1.74±10% ohms@20°C
INDUCTANCE/PHASE	每相电感	4.6±20% mH@1kHz
HOLDING TORQUE	保持转矩	8000 g.cm
PULL OUT TORQUE	运行转矩	
BACK EMF	反电动势	
DETENT TORQUE	定位转矩	
ROTOR INERTIA	转子转动惯量	102 g.cm²
WEIGHT	重量	550 g
TEMPERATURE RISE	温升	Less than 80K(小于80开)
SOURCE VOLTAGE	驱动器电压	24 VDC
INSULATION CLASS	绝缘等级	B 130°C
DIELECTRIC STRENGTH	介电强度	500VAC 1MIN
INSULATION RESISITANCE	绝缘电阻	100MOhm @500VDC
IP CODE	防护等级	IP30
OPERATION AMBIENT	使用环境	Ambient temperature:-20...+50°C,humidity Max. 85%(No condensation)
STORAGE AMBIENT	存储环境	Ambient temperature:-20...+85°C,humidity Max. 85%(No condensation)

PERMISSIBLE RADIAL+AXIAL FORCE
(允许的轴向和径向力)

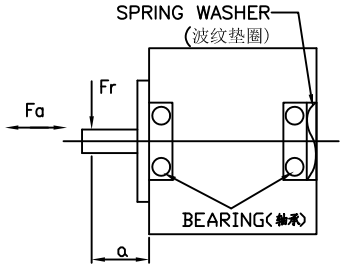

AXIAL-FORCE	轴向压力	Fa=10 N Max.
DISTANCE	距离	a=20 mm
RADIAL-FORCE	径向压力	Fr=28 N Max.
SHAFT RADIAL PLAY	径向间隙	0.02mm Max. @4N
SHAFT AXIAL PLAY	轴向间隙	0.08mm Max. @4N

UNLESS OTHERWISE SPECIFIED
TOLERANCES:
DECIMALS: ANGULAR:
.x ±0.5
.xx ±0.25 ±0°30'
.xxx ±0.1
UNIT: mm
DO NOT SCALE DRAWING

MATERIAL | CONTR. | DESIGN | DATE | CHECK | APPD

FIRST ANGLE PROJECTION

SCALE NTS
SHEET OF

P/N. 3.1.01.042.****
TITLE Specifications
USED ON FL42SC-08
DWG NO. REV A

FULLING MOTOR